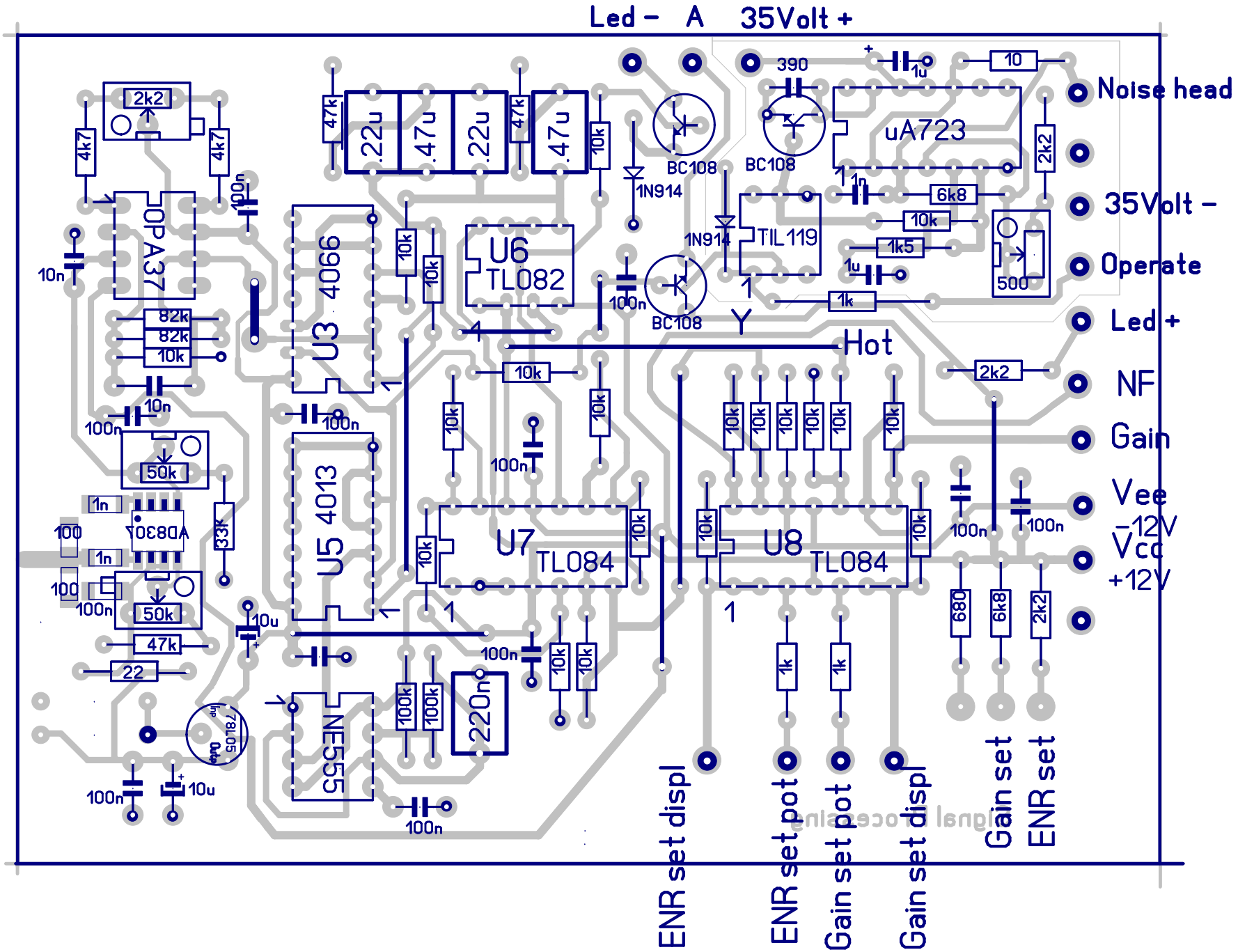

Led -
A
35Volt +
Noise head
35Volt -
Operate
Led +
NF
Gain
Vee
-12V
Vcc
+12V
Hot
ENR set displ
ENR set pot
Gain set pot
Gain set displ
Gain set
ENR set
OPA37
U3 4066
U5 4013
U6 TL082
U7 TL084
U8 TL084
uA723
TIL119
BC108
1N914
AD830
78L05
NE555
.22u
.47u
.22u
.47u
390
10
2k2
4k7
47k
10k
1n
6k8
1k5
1k
500
82k
50k
33k
47k
22
100n
10n
10u
100k
220n
680