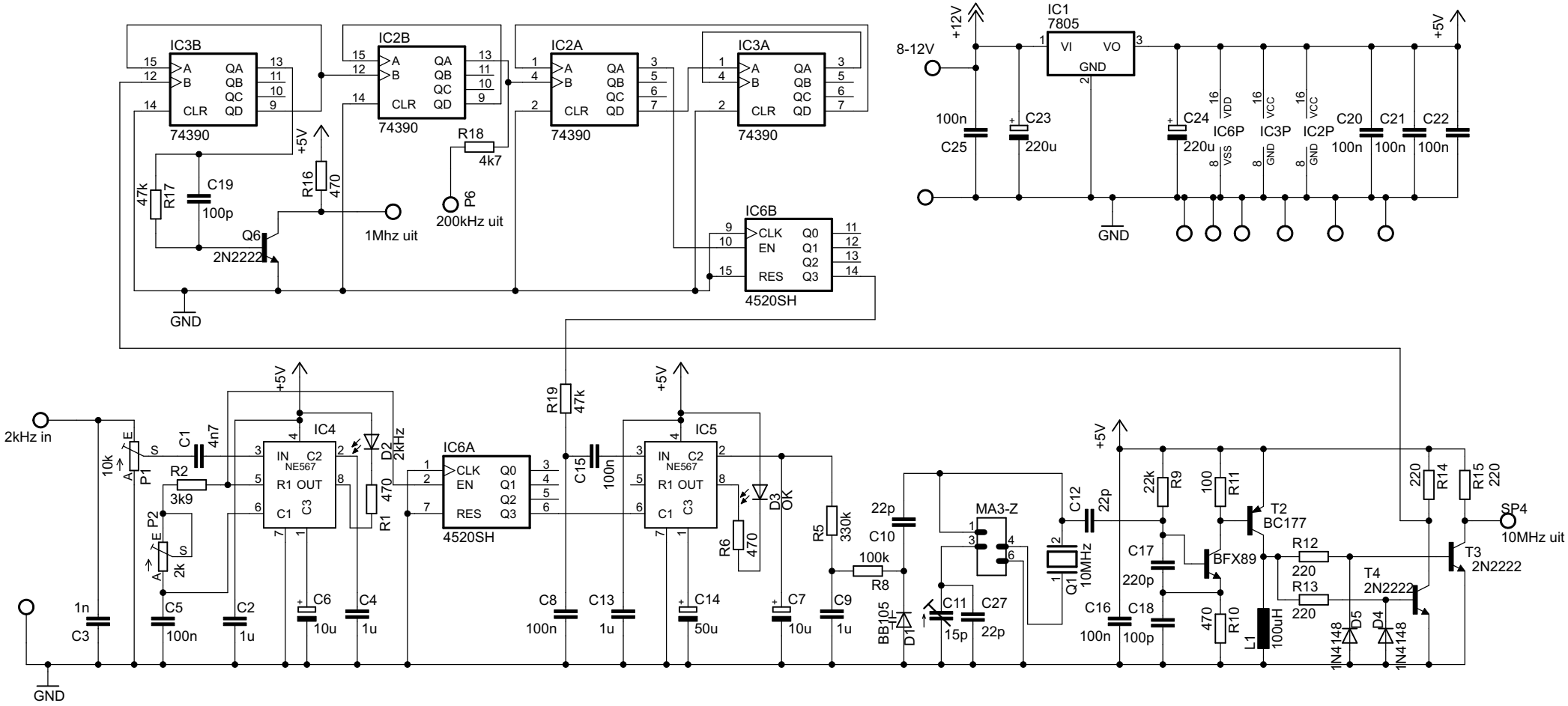
IC3B
74390
IC2B
74390
IC2A
74390
IC3A
74390
IC6B
4520SH
IC1
7805
VI
VO
GND
8-12V
+12V
+5V
100n
C25
C23
220u
C24
220u
IC6P
IC3P
IC2P
C20
C21
C22
100n
100n
100n
47k
R17
C19
100p
R16
470
Q6
2N2222
1Mhz uit
R18
4k7
P6
200kHz uit
GND
2kHz in
10k
P1
R2
3k9
P2
2k
C1
4n7
IC4
NE567
IN
C2
R1 OUT
C1
C3
D2
2kHz
R1
470
IC6A
4520SH
CLK
EN
RES
Q0
Q1
Q2
Q3
R19
47k
C15
100n
IC5
NE567
D3
OK
R6
470
R5
330k
R8
100k
C10
22p
BB105
D1
C11
15p
C27
22p
MA3-Z
C12
22p
Q1
10MHz
C17
220p
C16
100n
C18
100p
22k
R9
100
R11
470
R10
T2
BC177
BFX89
L1
100uH
R12
220
R13
220
T4
2N2222
D5
1N4148
D4
1N4148
220
R14
R15
220
T3
2N2222
SP4
10MHz uit
1n
C3
C5
100n
C2
1u
C6
10u
C4
1u
C8
100n
C13
1u
C14
50u
C7
10u
C9
1u
GND